The product information in this catalog is for reference only. Please request the Engineering Drawing for the most current and accurate design information.
All non-RoHS products have been discontinued, or will be discontinued soon. Please check the products status on the Hirose website RoHS search at www.hirose-connectors.com, or contact your Hirose sales representative.

HIF3B In-line Type Ribbon Cable Connector

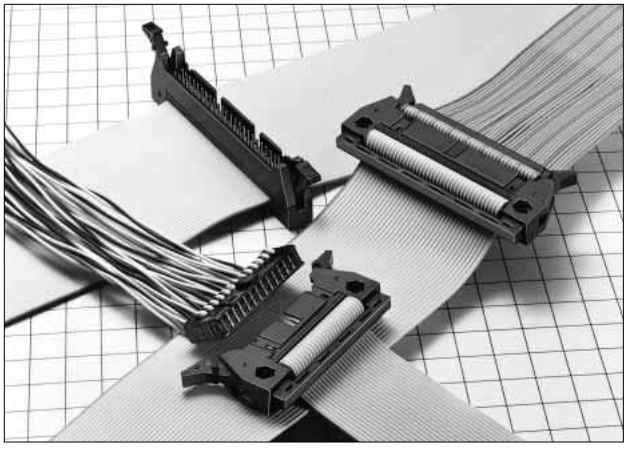

■Features

1. In-line Type

This connector can be used for internal wiring cable to cable within equipment.

2. Compatibility

This connector is compatible with HIF3A series as well as HIF3B series socket.

3. Applicable Cable

The applicable cable is UL2651 AWG#28 flat cable
(7 pcs./6.127mm, jacket diameter: 0.8 to 1.0mm).

■Product Specifications

Rating	Current rating : 1A Voltage rating : 200V AC	Operating Temperature Range : –55 to +85℃ (Note 1) Operating Moisture Range : 40 to 80%	Storage Temperature Range : –10 to +60℃ (Note 2) Storage Humidity Range : 40 to 70% (Note 2)

Item	Specification	Condition
1. Insulation Resistance	1000M ohms min.	500V DC
2. Withstanding voltage	No flashover or insulation breakdown.	650V AC/1 minute
3. Contact Resistance	15m ohms max.	0.1A
4. Vibration	No electrical discontinuity of 1μs or more	Frequency: 10 to 55 Hz, single amplitude of 0.75 mm, 2 hours in each of the 3 directions.
5. Humidity (Steady state)	Insulation resistance: 1000M ohms min.	96 hours at temperature of 40℃ and humidity of 90% to 95%
6. Temperature Cycle	No damage, cracks, or parts looseness.	(-65℃: 30 minutes → 15 to 35℃: 5 minutes max. 125℃: 30 minutes → 15 to 35℃: 5 minutes max.) 5 cycles
7. Durability (Mating/un-mating)	Contact resistance: 15m ohms max.	500 cycles

Note 1: Includes temperature rise caused by current flow.
Note 2: The term "storage" refers to products stored for long period of time prior to mounting and use. Operating Temperature Range and Humidity range covers non conducting condition of installed connectors in storage, shipment or during transportation.
Note 3: Information contained in this catalog represents general requirements for this Series. Contact us for the drawings and specifications for a specific part number shown.

■Material

Part	Material	Finish	Remarks
Insulator	PBT	Black	UL94V-0
Plug Contact	Beryllium copper	Gold plated over nickel underplated	———

■Ordering Information

HIF3BA - ✱ P D - 2.54 R - MC
❶ ❷ ❸ ❹ ❺ ❻ ❼

❶ Series Name	: HIF3BB (50, 60, 64 contacts only) HIF3BD (10 contacts only) HIF3BAE (60 contacts only)	❸ P : Plug	
		❹ D : contact alignment	: D : Double
		❺ Contact Pitch	: 2.54mm
❷ Number of Contacts	: 10, 16, 20, 26, 30, 34, 40, 50, 60 and 64	❻ Connection type	: Ribbon cable
		❼ MC	: Mold clamp

The product information in this catalog is for reference only. Please request the Engineering Drawing for the most current and accurate design information.
All non-RoHS products have been discontinued, or will be discontinued soon. Please check the products status on the Hirose website RoHS search at www.hirose-connectors.com, or contact your Hirose sales representative.

■Plug

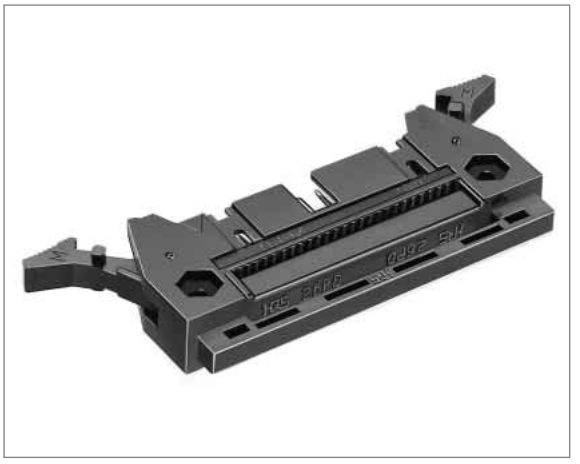

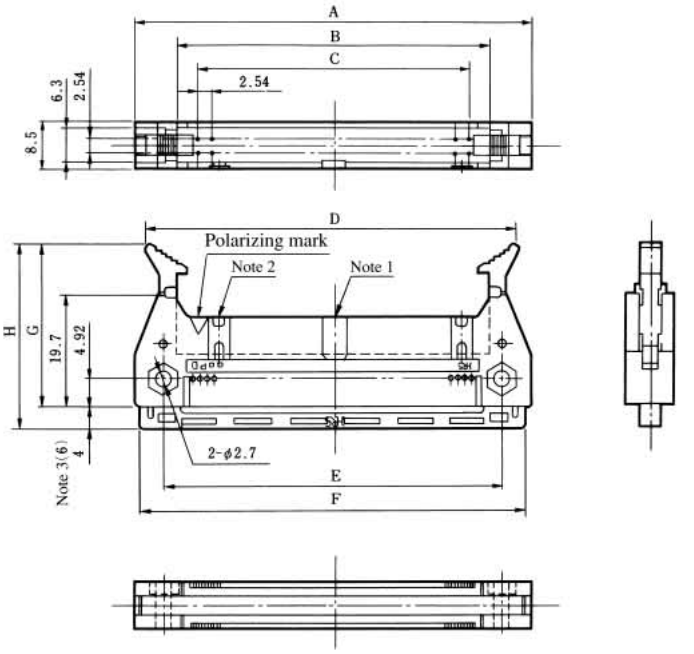

Note 1, Note 2: The number of polarizing slot and key installed positions changes according to products. The 10 contact connector only has no position for polarizing key insulation.
Note 3: The number indicated in parentheses are sizes for 60 and 64 contact connectors.
Note 4: The HIF3BAE-60PD-2.54R-MC product partially differs in a locking form, and the mating member is applicable for HIF3A only.

Unit:mm

Part Number	CL No.	Number of Contacts	A	B	C	D	E	F	G	H	Polarizing slot	RoHS
HIF3BD -10PD-2.54R-MC	611-0031-7	10	31.98	17.48	10.16	28.14 / MAX51.1	21.88	30.13	29.2	33.2	One at center	YES
HIF3BA -16PD-2.54R-MC	611-0032-0	16	39.60	25.10	17.78	35.74 / MAX58.7	29.50	37.75				
HIF3BA -20PD-2.54R-MC	611-0033-2	20	44.68	30.18	22.86	40.84 / MAX63.8	34.58	42.83				
HIF3BA -26PD-2.54R-MC	611-0034-5	26	52.30	37.80	30.48	48.44 / MAX71.4	42.20	50.45				
HIF3BA -30PD-2.54R-MC	611-0035-8	30	57.38	42.88	35.56	53.54 / MAX76.5	47.28	55.53				
HIF3BA -34PD-2.54R-MC	611-0036-0	34	62.46	47.96	40.64	58.64 / MAX81.6	52.36	60.61				
HIF3BA -40PD-2.54R-MC	611-0037-3	40	70.08	55.58	48.26	66.24 / MAX89.2	59.98	68.23				
HIF3BA -50PD-2.54R-MC	611-0038-6	50	82.78	68.28	60.96	78.94 / MAX101.9	72.68	80.93			One on right and left sides, resp.	
HIF3BB -50PD-2.54R-MC	611-0041-0	50									One at center	
HIF3BA -60PD-2.54R-MC	611-0039-9	60	95.48	80.98	73.66	91.64 / MAX114.6	85.38	93.63		35.2	One on right and left sides, resp.	
HIF3BB -60PD-2.54R-MC	611-0042-3	60									One at center	
HIF3BAE-60PD-2.54R-MC	611-0059-6	60				91.7 / MAX121.3			31.2	37.2	One on right and left sides, resp.	
HIF3BA -64PD-2.54R-MC	611-0040-8	64	100.56	86.06	78.74	96.74 / MAX119.7	90.46	98.71	29.2	35.2		
HIF3BB -64PD-2.54R-MC	611-0045-1	64									One at center	

*D size $\frac{\text{locking size}}{\text{unlocking size}}$

The product information in this catalog is for reference only. Please request the Engineering Drawing for the most current and accurate design information.
All non-RoHS products have been discontinued, or will be discontinued soon. Please check the products status on the Hirose website RoHS search at www.hirose-connectors.com, or contact your Hirose sales representative.

◆Connection Procedures

Note1: Cable length tolerance Less than 500 $^{+10}_{0}$ (mm)
More than 500 $^{+3}_{0}$ (mm)

Note2: When a cable such as a twist cable or a slit (like a roller screen) cable is used, the cable pitch will change according to cable manufacturers. If connection failure has occurred, please contact Hirose sales.

Type AO

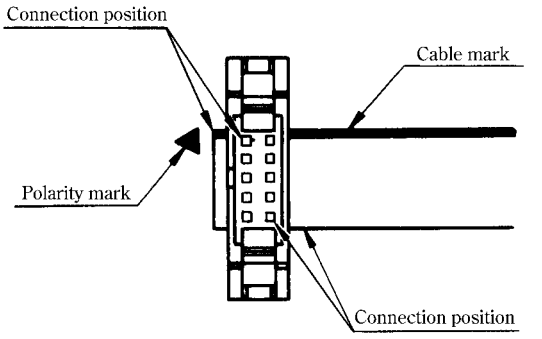

Front View

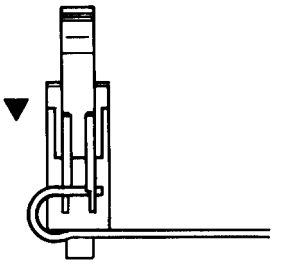

Side Section-View

Type BO

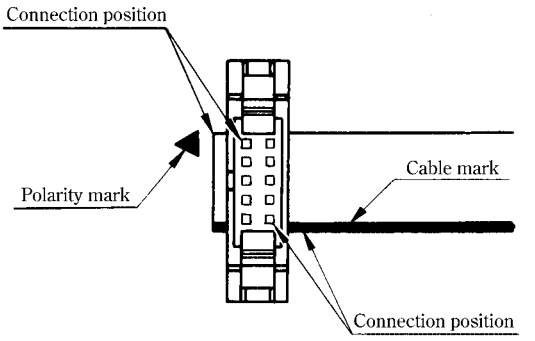

Front View

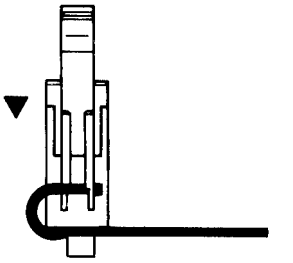

Side Section-View

Type CO

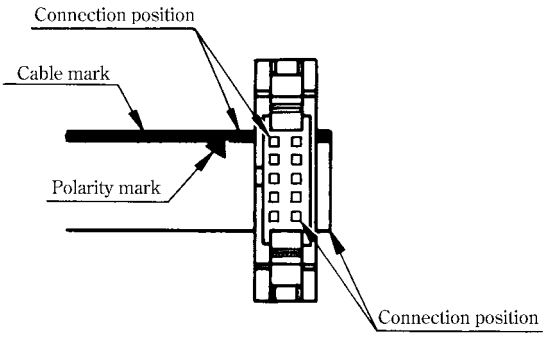

Front View

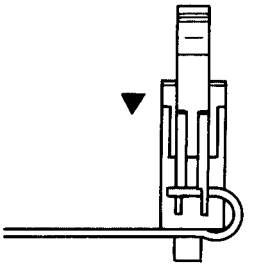

Side Section-View

Type DO

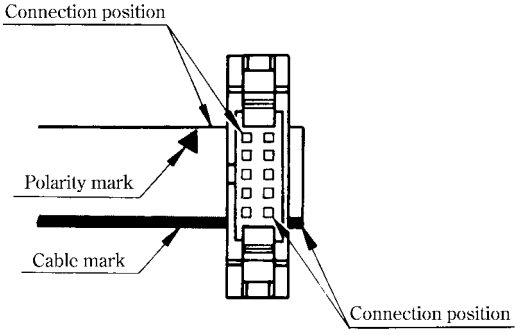

Front View

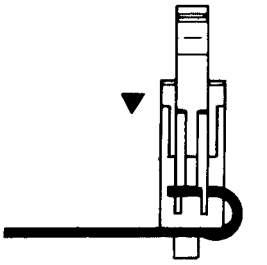

Side Section-View