Hirose Korea RF Switch Connector

KMS-517

目 次

1. 제품 특징----------page 2

2. 제품 사양 및 구성,상세 내용----------page 3

No.	製 品 名	수용 주파수	사양	page
1	KMS-517	~6GHz	SIZE 3.2mm * 3.0mm HEIGHT: 1.9mm	4

3.Reflow profile (Lead-free)----------page 5

KMS-517

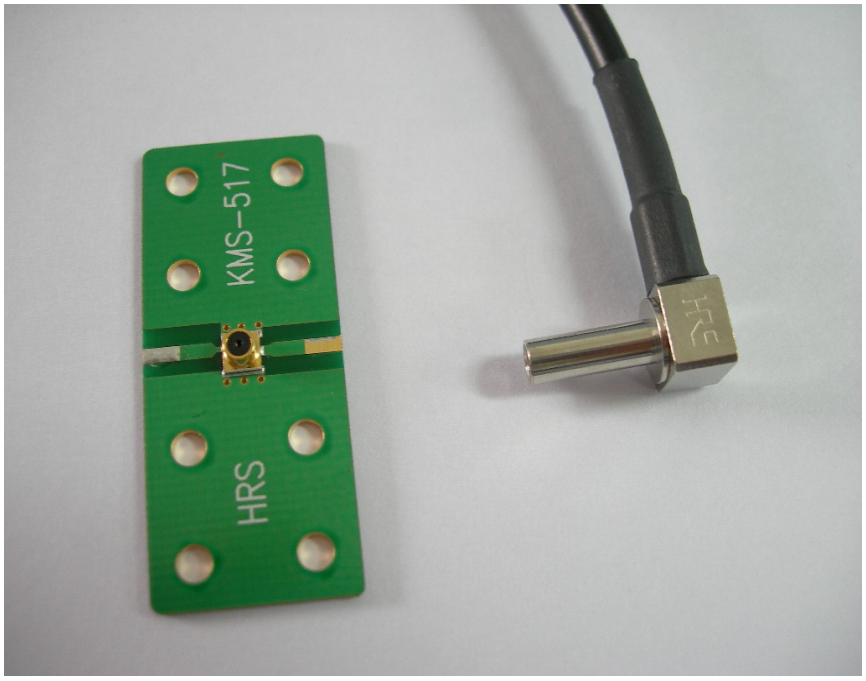

■ 특 징

1. 고주파용 RF Switch Connector로서 자동실장이 가능하고 금속Shell을 절삭가공하여 RF 특성 및 강도적으로 우수하다.

2. 고주파수용으로 사용 가능함.(DC~6GHz)

3. PLUG 삽입시 경사 삽입해도 제품상의 긁힘 및 파손이 없음.

4. 실장시 안테나측 회로와 반대로 실장되는 방지 가능있어 작업성이 용이하다.

5. 환경 규제에 의한 Pb-Free대응이 가능하다.

■ 용 도

MOBILE PHONE , GPS

■ 제품 규격

Rating	CHARACTERISTIC IMPEDANCE	Operating temperature range	Storage temperature range
	50 Ω	- 30 ℃ ~ + 80 ℃	-30 ~ +85 ℃(NON CONDENSING)

Item	**Specification**	**Condition**
1.Insulation Resistance	1000MΩ Min	100V DC
2.Withstand voltage	NO INSULATION DESTRUCTION	100V AC for 1 minute
3.Contact Resistance	-CENTER MAXIMUM OF 75 mΩ -OUTER MAXIMUM OF 50 mΩ	DC 100 mA
4. V.S.W.R	MUST BE UNDER THE STD.VALUE AT FREQUENCY 0㎒ TO 6000㎒	MAXIMUM OF 1.6
5.INSERTION LOSS	MUST BE UNDER THE STD.VALUE AT FREQUENCY 0㎒ TO 6000㎒	MAXIMUM OF 0.85 dB
6.ISOLATION	MUST BE UNDER THE STD.VALUE AT FREQUENCY DC TO 3000㎒ 3000㎒ TO 6000㎒	MINIMUM OF 20 dB MINIMUM OF 10 dB

■ MATERIAL

PART		MATERIAL	REMARK / FINISH
RF SWITCH	SHELL	BRASS	NiP + AuP
	HOUSING	POLYAMID	-
	BLADE SPRING	BE-CU ALLOY STRIP	NiP + AuP
	CONTACT PLATE	PHOSPHOR BRONZE	NiP + AuP

※ Reflow최대 온도 260℃를 만족시킴으로 Lead-free Soldering의 요구조건에 적합한 제품임.

※ RoHS지침 및 유해 물질 관리 기준에 적합한 제품임.

■ Ordering Information

KMS -517

① ②

①	Serieal Name	KMS(KOREA MOBILE SWITCH)
②	Number of Contac	5SERIES

■ *KMS-517*

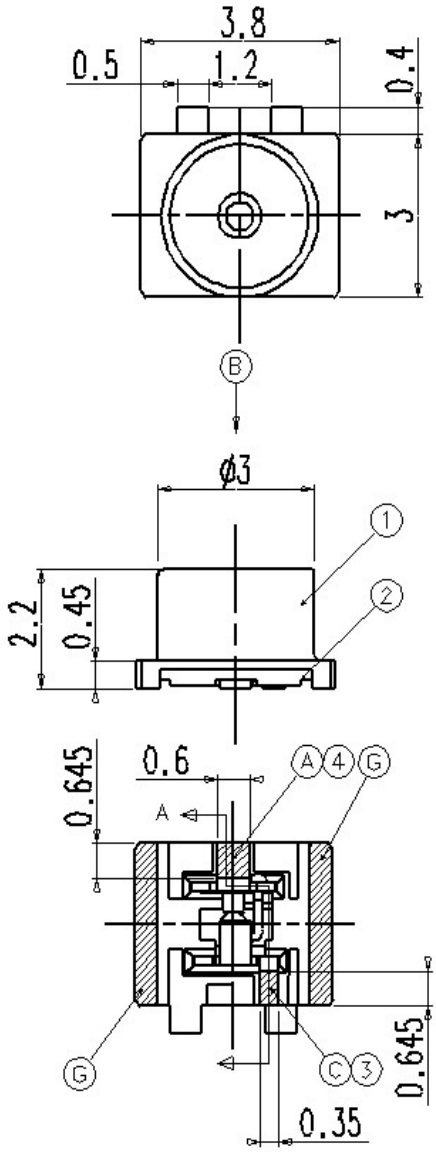

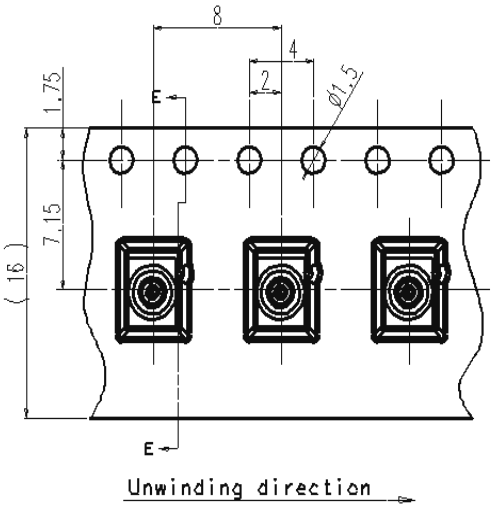

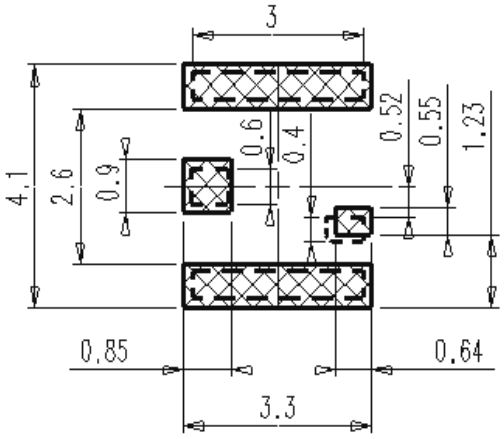

Recommend pcb patten

Product Name	HEIGHT	Package	Remark
KMS-517	1.9mm	Emboss Tape	2,000ea/Reel

■ *KMS517LP (KMS-517 TEST CABLE)*

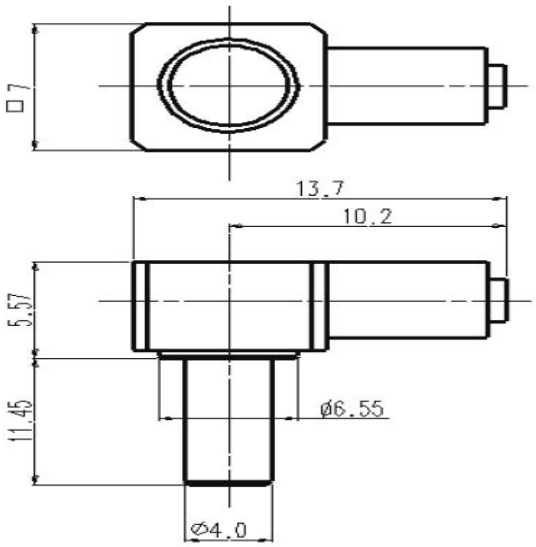

Product No	HRS No.	LIFE	RoHS
KMS517LP	6324-****	5,000회	OK

-KMS-517과 수직으로 결합하여 사용한다.

-KMS-517과 결합 후 고정강도는 3~10kgf일 것.

-보증 수명은 5,000회이며 KMS-517의 보증 수명은 아닙니다.

■ *Reflow Profile*

Using Lead-free Solder Paste

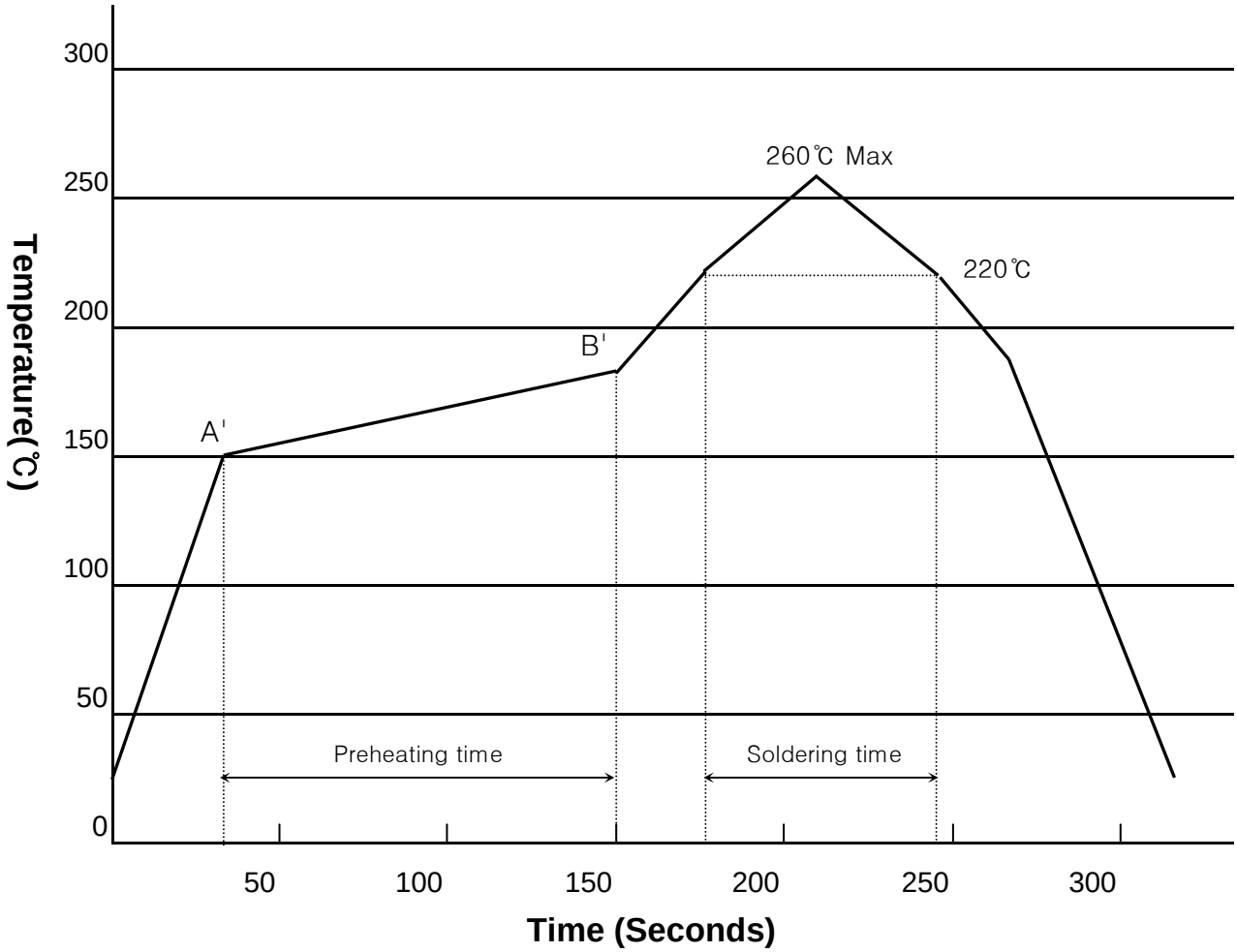

Recommended Application Conditions

Reflow System: IR reflow

Solder: Cream type Sn / 3 Ag / 0.5 Cu

Flux content 11%wt

Metal mask thickness: 0.08 ~ 0.1mm

Preheating time: 150℃~190℃, 90±30seconds

A'=150℃~170℃ , B'=170℃~190℃

Soldering time: 260℃ Max

220℃ Min, 30~60 seconds

Hirose Korea RF Switch Connector

KMS-517

1. Characteristic of Products ----------page 2

2.Specifications & Formation of Products ----------page 3

No.	*Products Name*	*Frequency range*	*Specification*	*page*
1	*KMS-517*	*~6GHz*	*SIZE 3.2mm * 3.0mm* *HEIGHT: 1.9mm*	4

3.Reflow profile (Lead-free)----------page 5

KMS-517

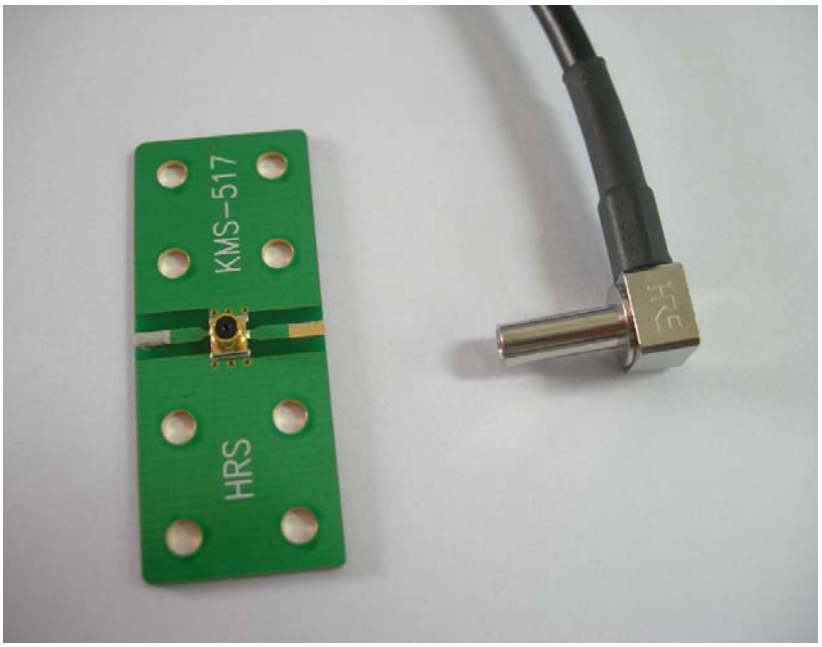

■ FEATURES

1. It is possible to automatically set it up sa high-frequency radio wave,
this is superior in the degree of strength and RF quality because of cutting a metal shell.

2. it is available as a high-frequency radio(DC~6GHz)

3. there are no scratch or damage as a resnlt of inserting it tilted into the plug

4. it is simple to handle due to it's preventive function, which is set against
the circuit of the antenna, while setting up the electric parts

5. it is possible to manage pb-free under the envirnomental restrictions

■ APPLICATIONS

MOBILE PHONE , GPS

■ Specifications

Rating	CHARACTERISTIC IMPEDANCE	Operating temperature range	Storage temperature range
	50 Ω	- 30 ℃ ~ + 80 ℃	-30 ~ +85 ℃(NON CONDENSING)

Item	**Specification**	**Condition**
1.Insulation Resistance	1000MΩ Min	100V DC
2.Withstand voltage	NO INSULATION DESTRUCTION	100V AC for 1 minute
3.Contact Resistance	-CENTER MAXIMUM OF 75 mΩ -OUTER MAXIMUM OF 50 mΩ	DC 100 mA
4. V.S.W.R	MUST BE UNDER THE STD.VALUE AT FREQUENCY 0㎒ TO 6000㎒	MAXIMUM OF 1.6
5.INSERTION LOSS	MUST BE UNDER THE STD.VALUE AT FREQUENCY 0㎒ TO 6000㎒	MAXIMUM OF 0.85 dB
6.ISOLATION	MUST BE UNDER THE STD.VALUE AT FREQUENCY DC TO 6000㎒ 3000㎒ TO 6000㎒	MINIMUM OF 20 dB MINIMUM OF 10 dB

■ MATERIAL

PART		MATERIAL	REMARK / FINISH
RF SWITCH	SHELL	BRASS	NiP + AuP
	HOUSING	POLYAMID	-
	BLADE SPRING	BE-CU ALLOY STRIP	NiP + AuP
	CONTACT PLATE	PHOSPHOR BRONZE	NiP + AuP

※ This product is suitable to the condition of smokeless lead soldering to be satisfiend under the conditions of a high temperature of 260℃ deglee

※ The product moets the criterion of managing harmful or the RoHS guide

■ Ordering Information

KMS -517

① ②

①	Serieal Name	KMS(KOREA MOBILE SWITCH)
②	Number of Contac	5SERIES

■ *KMS-517*

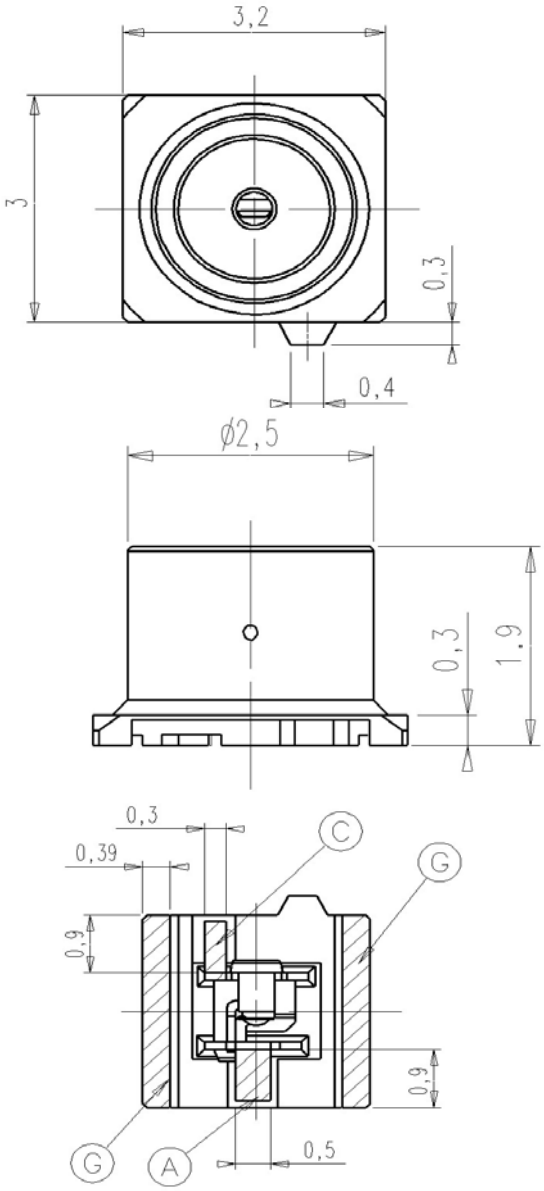

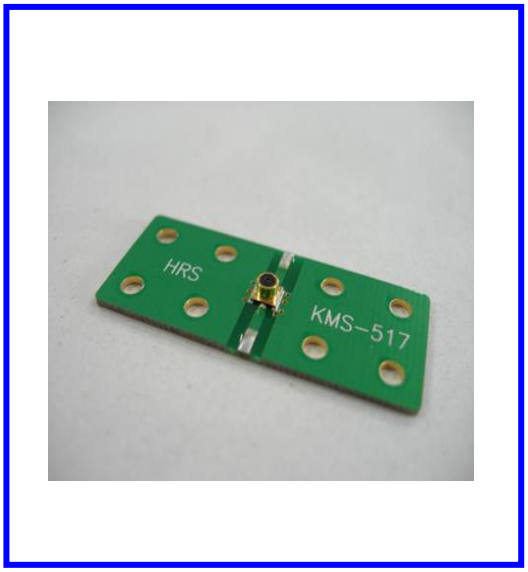

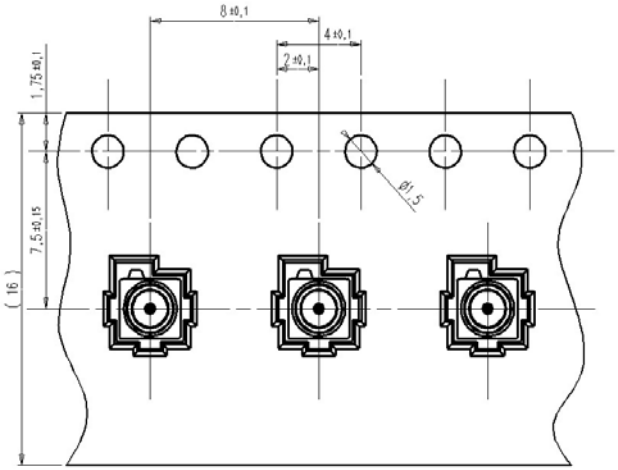

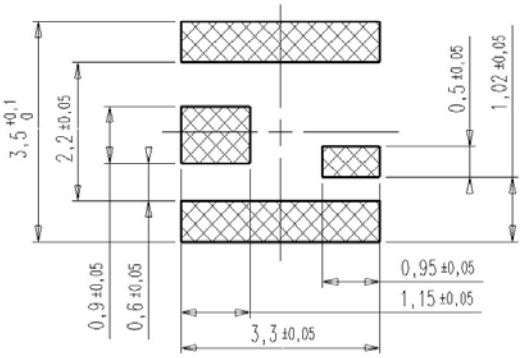

RECOMMENDED LAND PATTERN DIMENSION OF PCB

Product Name	HEIGHT	Package	Remark
KMS-517	1.9mm	Emboss Tape	2,000ea/Reel

■ *KMS517LP (KMS-517 TEST CABLE)*

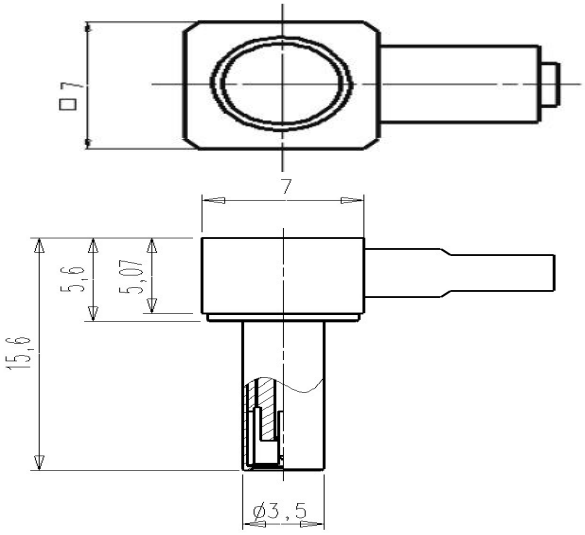

Product No	HRS No.	LIFE	RoHS
KMS517LP	6324-****	5,000회	OK

1. Durability

   5,000mating/unmating cycles, with Corrsponding KMS-517.

2. Fixed force

   3 to 10kgf, with Corrsponding KMS-517

3. KMS-517-LP

   Use this model mated with KMS-517 to vertical direction.